MODEL CAX - CSX

Roof Curb Adapter / Extension • Aluminum or Steel

Standard Construction and Materials

Formed Aluminum Curb Adapter / Extension

SHELL & BASEPLATE: .063" thick (nominal) aluminum alloy 3003-H14. All seams are fully welded and sprayed with protective coating.
FINISH: Mill.

Formed Steel Curb Adapter / Extension

SHELL & BASEPLATE: 18 GA. galvanized steel. All seams are fully welded and sprayed with protective coating.
FINISH: Mill.

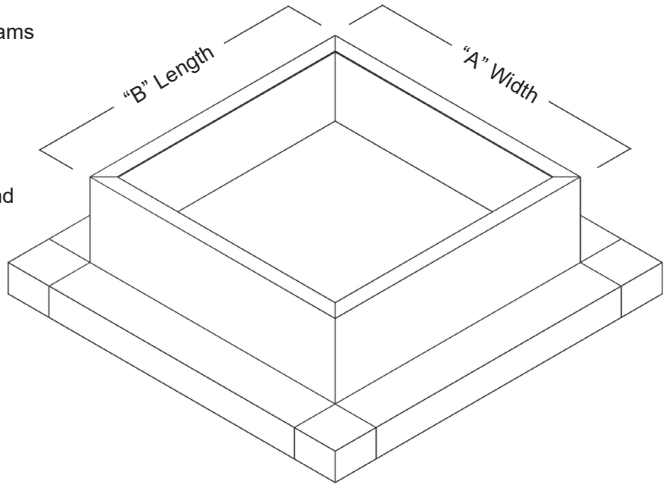

Options

Aluminum Material - Available in .081" - .125" thick 3003-H14 alloy.
Steel Material - Available in various gauges of galvanized, galvaneal or stainless.
Liners - Used for retention of insulation or as support to strengthen large units that will support a heavy load. Liners are manufactured as an integral part of the product to add maximum structural support.
Curb Cap - can be replaced by 4½" or other sizes by specifying.
Platform Cap - A ¾" plywood top with a metal cap fabricated of the same material as the product.
Wood Nailer - Factory installed wood nailer for equipment mounting is mechanically fastened to top perimeter.
Gasket - ¼" thick polyurethane foam gasket can be installed, lining the entire top perimeter. Gasket can be used in place of, or in addition to a wood nailer.
Insulation - Available with 1" or 2" semi-rigid insulation.
Access Panels - To provide a passageway to internal equipment, an access opening is cut and lined with a protective vinyl edge seal and the cover panel is mechanically fastened over the opening. Minimum height restrictions apply.
Louvered Vents - Provides airflow through the curb. Units are available with 6"W x ⅞"H louvered vents, with 4 per side. Minimum height restrictions apply.
Damper Rack - The rack is located in the bottom of the curb and a damper is then mounted on top of the rack. Damper and/or rack flange dimensions must be specified.
Security Bars - Selections of bar diameters, frame styles, and spacing are available.
Finishes - A wide selection of finishes include baked enamel, epoxy, or prime coat. Aluminum curb finishes include Kynar, clear or color anodize.

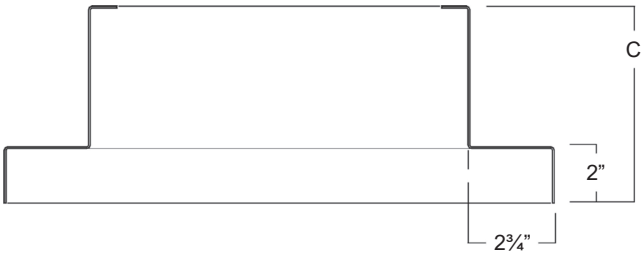

Notes

1. "A" width, "B" length and "C" height are outside dimensions.
2. If height or width exceed 90", multi-section construction may be required.

Item #	Qty	Width	Length	Height	Aluminum	Steel	Height Rise	Direction	
		Opening Dimensions			Material		Pitch / Peak		Union Made
Arch. / Eng.:				EDR:		ECN:		Job:	
Contractor:									
Project:				Date:		DWN:		DWG:	

In the interest of product development, Cesco Products reserves the right to make changes without notice.

Division of Mestek
Member of AMCA

450 Riverside Dr • Wyalusing PA, 18853
Phone: 570-746-1888 • Fax: 570-746-9286
www.cescoproducts.com